INDIA INNOVATES 2026

GRIDSHIELD

AI-Driven Cyber-Physical Intrusion Detection System for Smart Power Grids

Project Leader: **Parth Sidhapura** · Team Members: Parth Sidhapura , Vansh Patel, Raj Darji, Priyanshi Thakor, Vanshika Bhardwaj

PROBLEM

The Critical Threat to National Security

National power grids face escalating cyber threats. Legacy SCADA infrastructure was never designed for today's threat environment — and intelligent, real-time intrusion detection remains absent across most substations.

Attack Vectors

- **LAA** — Load Altering Attacks that destabilize grid frequency and trigger cascading failures
- **FDIA** — False Data Injection Attacks that corrupt sensor readings and blind operators
- Surging state-sponsored and criminal cyber campaigns targeting national energy infrastructure
- Severe vulnerabilities in legacy SCADA systems with no native encryption or authentication

The Fallout

- Total regional blackouts affecting millions of citizens
- Catastrophic financial losses running into billions of rupees per incident
- Infrastructure cascading failure across interconnected grid sectors
- Long-term erosion of public trust in critical infrastructure

THE SOLUTION

Intelligent, Cyber-Physical Defense

GridShield delivers a unified, AI-powered defense layer that bridges cyber and physical security — detecting, diverting, and neutralizing threats in real time without disrupting grid operations.

AI Behavioral Anomaly Detection

Continuous monitoring of grid telemetry to flag deviations from normal operational baselines with sub-second latency.

Cyber-Physical Integration

Seamless fusion of IT network security with OT physical sensor data — a single pane of glass for total grid awareness.

Honeypot Architecture

Conpot-based decoy systems actively divert attackers, capture TTPs, and protect live infrastructure from direct exposure.

Automated Real-Time Mitigation

Pre-programmed response playbooks isolate compromised sectors and restore service without waiting for human approval.

ARCHITECTURAL DESIGN

Architectural Flow of Prototype Version

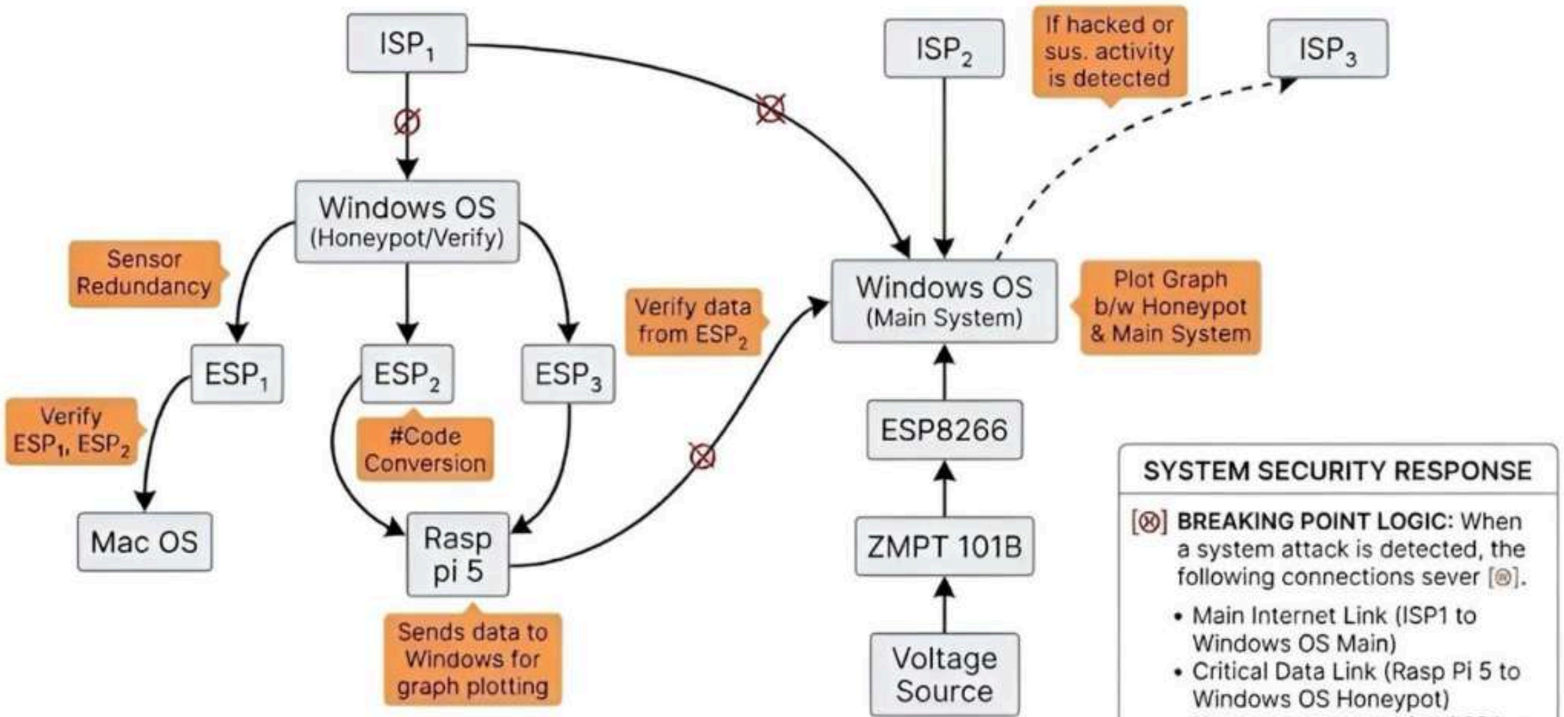

SYSTEM SECURITY RESPONSE

[⊗] **BREAKING POINT LOGIC:** When a system attack is detected, the following connections sever [⊗].

- Main Internet Link (ISP1 to Windows OS Main)
- Critical Data Link (Rasp Pi 5 to Windows OS Honeypot)
- Honeypot Internet Link (ISP1 to Windows OS Honeypot)

ARCHITECTURAL DESIGN

Architectural Flow of Upscaled Version

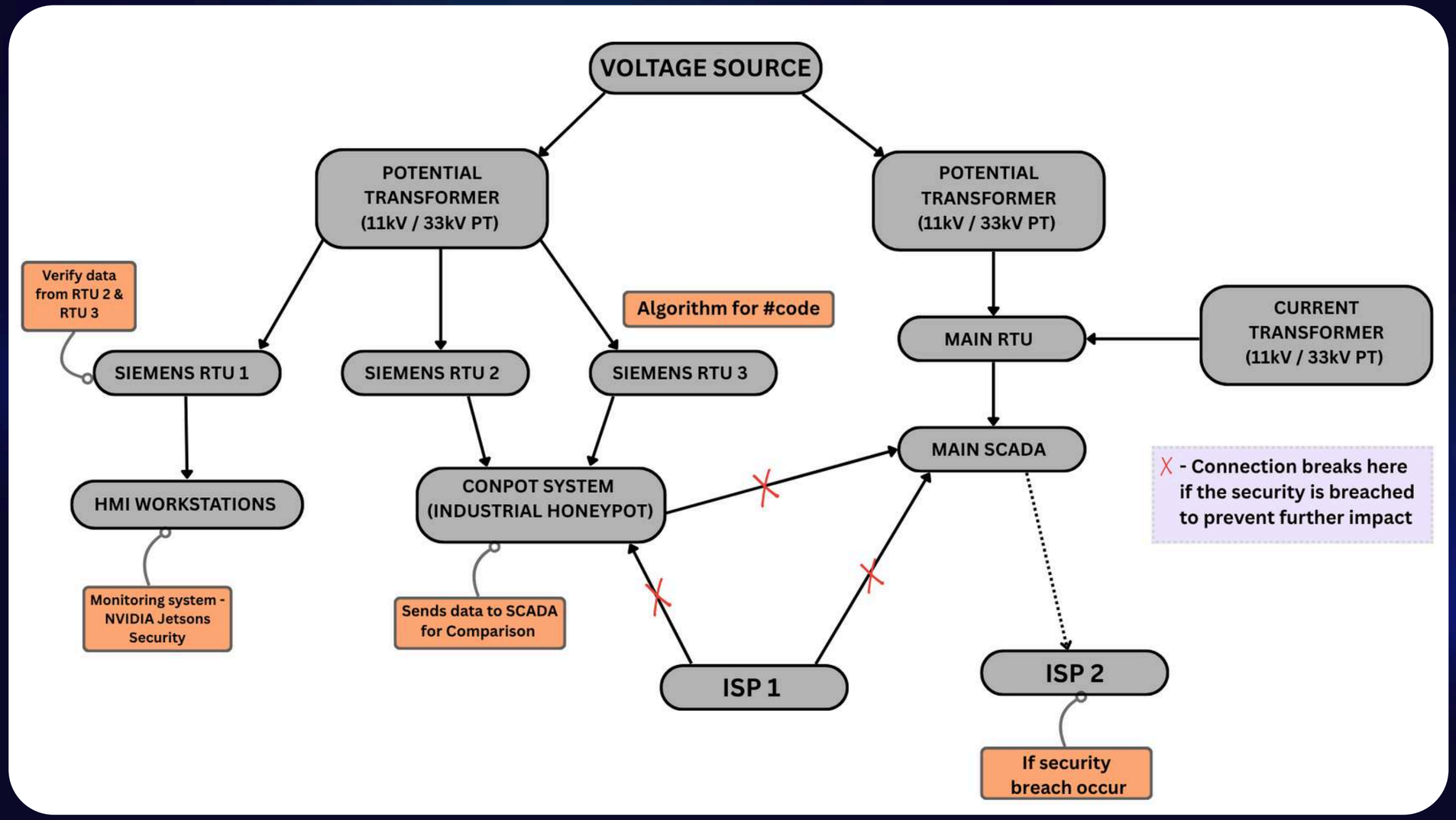

ARCHITECTURE

From Research Prototype to Enterprise Deployment

GridShield's architecture evolves from a safe, isolated research environment to a full industrial-grade deployment — each component upgraded to meet enterprise reliability and security standards.

Proof of Concept — Research Phase

An isolated, low-cost research environment designed for safe AI training and threat simulation. Safely utilizes simulated voltage data instead of direct high-voltage measurements for hardware protection and controlled AI model development.

- ESP Microcontroller + Raspberry Pi 5
- ZMPT101B Voltage Sensors
- WiFi-based local network
- Windows PC for SCADA emulation

Enterprise-Grade Deployment Pipeline

CT / PT Sensors

RTU (Siemens / ABB)

Edge AI (NVIDIA Jetson Orin Nano)

Industrial Router (Moxa) via OFC + VPN

SCADA (WinCC / Ignition)

ARCHITECTURE

Component Upgrade Matrix

Every element of the prototype is systematically upgraded to industrial-grade hardware and protocols — ensuring reliability, security, and compliance in live substation environments.

Prototype Component	Industrial Deployment
ESP Microcontroller	RTU (Siemens / ABB)
Raspberry Pi 5	Industrial Edge Computer (NVIDIA Jetson Orin Nano)
Windows PC	Dedicated SCADA Server (WinCC / Ignition)
ZMPT101B Sensor	Potential Transformer (PT) & CT Sensor
WiFi	IEC 60870-5-104 / Modbus TCP / DNP3
Standard Router	Industrial Gateway (Moxa)
Open Internet	OFC Fiber + VPN Tunneling

SECURITY ARCHITECTURE

Defense-in-Depth: The Cyber Security Layer

GridShield implements a layered security architecture — each layer independently capable of detecting and responding to threats, creating a resilient, multi-barrier defense for critical grid infrastructure.

1

SIEM

Splunk / ELK Stack — Centralized event correlation, log aggregation, and real-time security alerting across all grid nodes.

2

IDS / IPS

Snort / Suricata — Network-based intrusion detection and prevention, inspecting OT and IT traffic for known and anomalous signatures.

3

Honeypot

Conpot — Low-interaction SCADA honeypot that emulates grid devices, luring attackers away from live systems and capturing forensic data.

4

AI Threat Engine

Proprietary ML models trained on historical fault and attack data — detecting zero-day threats and behavioral anomalies in real time.

INCIDENT RESPONSE

Step-by-Step Threat Mitigation

GridShield's automated response pipeline eliminates human latency in critical scenarios — from initial sensor detection to full sector isolation in under one second.

01
Sensor Detects Anomaly

CT/PT sensors identify voltage or current deviation beyond safe operational thresholds.

02
RTU Transmits Data

Remote Terminal Unit packages and securely transmits telemetry to the Edge AI engine via IEC 104 protocol.

03
Edge AI Flags Threat

NVIDIA Jetson Orin Nano runs inference models, classifying the anomaly as a cyber attack, equipment fault, or grid disturbance.

04
SCADA Isolates Sector

Automated command sent to circuit breakers and switches — isolating the compromised grid sector within milliseconds.

05
Automated Response Triggered

SIEM logs the incident, IDS updates threat signatures, honeypot activates, and operators receive a prioritized alert with full context.

BUSINESS CASE

Why GridShield? Strategic Advantages & Cost Profile

Zero-Disruption Integration

Plug-and-Play deployment with existing substations — no grid downtime, no legacy system replacement required.

Unified Cyber-Physical Layer

Single architecture covering both IT network security and OT physical sensor integrity — eliminating security silos.

Sub-Second Detection

Real-time AI inference at the edge ensures threats are identified and contained before they cascade into outages.

Highly Scalable

Cost-efficient per-unit economics enable rapid state and national-level scaling without exponential budget growth.

Capital Expenditure (CAPEX) — Per Substation

Component	Estimated Cost
RTU (Siemens / ABB)	₹1–3 Lakh
Edge AI Engine (NVIDIA Jetson)	₹40k–1 Lakh
Secure Networking (OFC + VPN)	₹50k+
SCADA Integration (WinCC / Ignition)	₹2–5 Lakh
Total Estimated CAPEX	**₹5–10 Lakh**

Operational Expenditure (OPEX)

- Routine Maintenance & Sensor Calibration
- Secure Cloud & Server Upkeep
- 24/7 Monitoring Overhead
- *Key Benefit:* Minimal manual manpower required — AI automation handles the majority of detection and response tasks, dramatically reducing operational staffing costs.

IMPLEMENTATION

Phased Implementation Roadmap

GridShield follows a structured, risk-managed deployment strategy — beginning with a controlled pilot and scaling progressively to state and national coverage as confidence and data maturity grow.

Phase 1 · Months 1–3

Pilot Deployment — Single substation installation. Baseline data collection, AI model calibration, and integration validation with existing SCADA infrastructure.

Phase 3 · Months 9–12

State / National Scaling — Rollout across state-level grid infrastructure. Centralized command dashboard. Full AI threat intelligence sharing between nodes.

1 2 3

Phase 2 · Months 4–8

Multi-Substation Integration — Expand to 5–10 substations within a district. Cross-node correlation enabled. Honeypot network activated. SIEM fully operational.

PARTNERSHIP

Requirements & the Future of India's Grid

Prerequisites for Successful Deployment

To ensure effective AI training and seamless integration, GridShield requires the following from government and utility partners:

- Access to substation data logs — voltage, current, and frequency telemetry
- Limited API access to existing SCADA systems for read-only integration
- Detailed network topology maps of target grid sectors
- Historical attack, fault, and failure data for supervised AI model training

> GridShield is not just a defense mechanism — it is the foundation for tomorrow's AI-driven, self-healing power grid. **Let's protect India's infrastructure.**

Contact & Collaboration

Parth Sidhapura · Project Leader, Grid Hunters
Email: parthsidhapura110@gmail.com · Phone: +91 90798 13199
GitHub: https://github.com/Parth-Sidhapura/GridShield